Cambridge International AS & A Level

Cambridge International Examinations
Cambridge International Advanced Subsidiary and Advanced Level

PHYSICS **9702/11**

Paper 1 Multiple Choice **May/June 2016**

1 hour 15 minutes

Additional Materials: Multiple Choice Answer Sheet
Soft clean eraser
Soft pencil (type B or HB is recommended)

3167994674

READ THESE INSTRUCTIONS FIRST

Write in soft pencil.
Do not use staples, paper clips, glue or correction fluid.
Write your name, Centre number and candidate number on the Answer Sheet in the spaces provided unless this has been done for you.
DO **NOT** WRITE IN ANY BARCODES.

There are **forty** questions on this paper. Answer **all** questions. For each question there are four possible answers **A**, **B**, **C** and **D**.
Choose the **one** you consider correct and record your choice in **soft pencil** on the separate Answer Sheet.

Read the instructions on the Answer Sheet very carefully.

Each correct answer will score one mark. A mark will not be deducted for a wrong answer.
Any working should be done in this booklet.
Electronic calculators may be used.

IB16 06_9702_11/3RP
© UCLES 2016

Data

speed of light in free space	$c = 3.00 \times 10^{8}\,\text{m s}^{-1}$
permeability of free space	$\mu_0 = 4\pi \times 10^{-7}\,\text{H m}^{-1}$
permittivity of free space	$\varepsilon_0 = 8.85 \times 10^{-12}\,\text{F m}^{-1}$
	$\left(\frac{1}{4\pi\varepsilon_0} = 8.99 \times 10^{9}\,\text{m F}^{-1}\right)$
elementary charge	$e = 1.60 \times 10^{-19}\,\text{C}$
the Planck constant	$h = 6.63 \times 10^{-34}\,\text{J s}$
unified atomic mass unit	$1\,\text{u} = 1.66 \times 10^{-27}\,\text{kg}$
rest mass of electron	$m_\text{e} = 9.11 \times 10^{-31}\,\text{kg}$
rest mass of proton	$m_\text{p} = 1.67 \times 10^{-27}\,\text{kg}$
molar gas constant	$R = 8.31\,\text{J K}^{-1}\,\text{mol}^{-1}$
the Avogadro constant	$N_\text{A} = 6.02 \times 10^{23}\,\text{mol}^{-1}$
the Boltzmann constant	$k = 1.38 \times 10^{-23}\,\text{J K}^{-1}$
gravitational constant	$G = 6.67 \times 10^{-11}\,\text{N m}^2\,\text{kg}^{-2}$
acceleration of free fall	$g = 9.81\,\text{m s}^{-2}$

© UCLES 2016

Formulae

uniformly accelerated motion	$s = ut + \frac{1}{2}at^2$ $v^2 = u^2 + 2as$
work done on/by a gas	$W = p\Delta V$
gravitational potential	$\phi = -\frac{Gm}{r}$
hydrostatic pressure	$p = \rho gh$
pressure of an ideal gas	$p = \frac{1}{3}\frac{Nm}{V}\langle c^2 \rangle$
simple harmonic motion	$a = -\omega^2 x$
velocity of particle in s.h.m.	$v = v_0 \cos \omega t$ $v = \pm\omega\sqrt{(x_0^2 - x^2)}$
Doppler effect	$f_o = \frac{f_s v}{v \pm v_s}$
electric potential	$V = \frac{Q}{4\pi\varepsilon_0 r}$
capacitors in series	$1/C = 1/C_1 + 1/C_2 + \ldots$
capacitors in parallel	$C = C_1 + C_2 + \ldots$
energy of charged capacitor	$W = \frac{1}{2}QV$
electric current	$I = Anvq$
resistors in series	$R = R_1 + R_2 + \ldots$
resistors in parallel	$1/R = 1/R_1 + 1/R_2 + \ldots$
Hall voltage	$V_H = \frac{BI}{ntq}$
alternating current/voltage	$x = x_0 \sin \omega t$
radioactive decay	$x = x_0 \exp(-\lambda t)$
decay constant	$\lambda = \frac{0.693}{t_{\frac{1}{2}}}$

© UCLES 2016

[Turn over

1 Three wires each exert a horizontal force on a vertical pole, as shown.

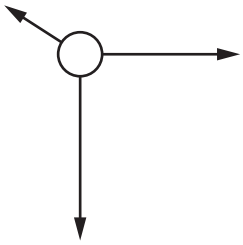

Which vector diagram shows the resultant force *R* acting on the pole?

A

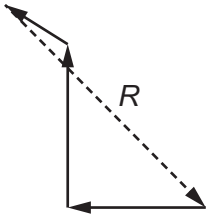

B

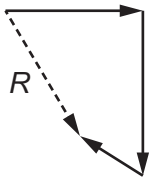

C

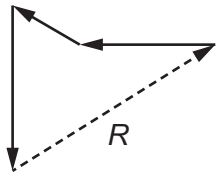

D

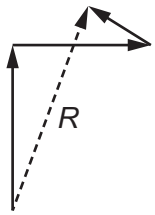

2 Which pair of quantities do **not** have the same SI base units?

A electromotive force and electric potential difference

B pressure and stress

C spring constant and moment of a force

D torque and work

© UCLES 2016

3 A lift is supported by two steel cables, each of length 10 m and diameter 0.5 cm.

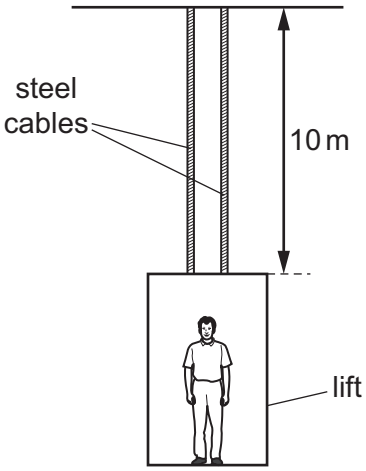

NOT TO
SCALE

The cables extend by 1 mm when a man of mass 80 kg steps into the lift.

What is the best estimate of the value of the Young modulus of the steel?

A $2 \times 10^{10}\,\text{N m}^{-2}$

B $4 \times 10^{10}\,\text{N m}^{-2}$

C $2 \times 10^{11}\,\text{N m}^{-2}$

D $4 \times 10^{11}\,\text{N m}^{-2}$

4 When performing an experiment, a student should minimise the uncertainty of any measurement.

In which case is the student reducing the systematic error in a measurement?

A adjusting a voltmeter needle pointer to the zero position before using it to measure a potential difference

B measuring the diameter of a wire at several points and orientations

C measuring the mass of 100 paperclips to determine the mass of one paperclip

D timing 20 oscillations of a mass on a spring to determine the period of one oscillation

© UCLES 2016

5 A calibration graph is produced for a faulty ammeter.

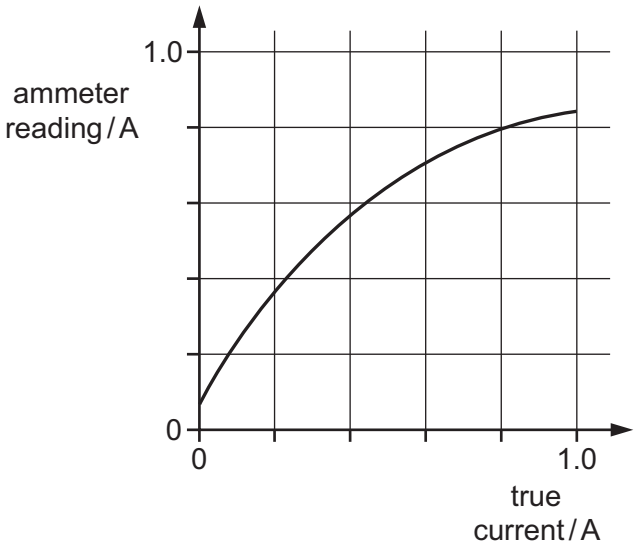

Which ammeter reading will be nearest to the true current?

A 0.2 A **B** 0.4 A **C** 0.6 A **D** 0.8 A

6 A car accelerates uniformly from velocity *u* to velocity *v* in time *t*.

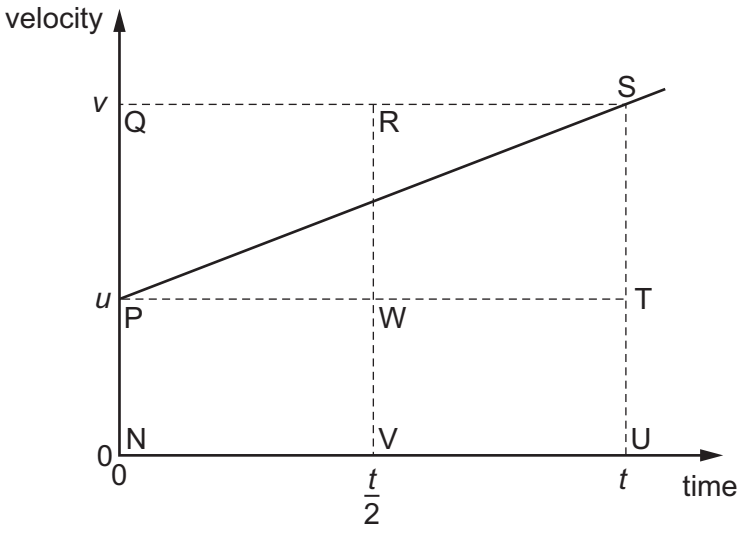

On the graph, which area equals the distance travelled by the car in time *t*?

A NPTU + PQST

B NPWV + VRSU

C NPWV + WRST

D PST + PQS

© UCLES 2016

7 A student uses a spring gun to launch a steel ball with a constant horizontal velocity. He varies the height h of the gun and measures the horizontal displacement r of the ball when it hits the ground.

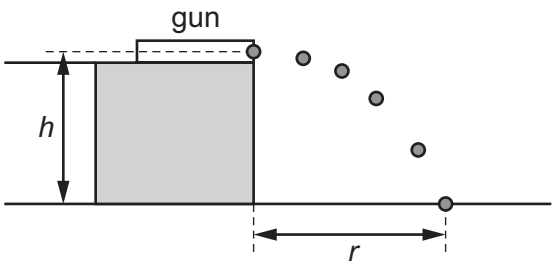

Which graph shows the variation with height h of the horizontal displacement r?

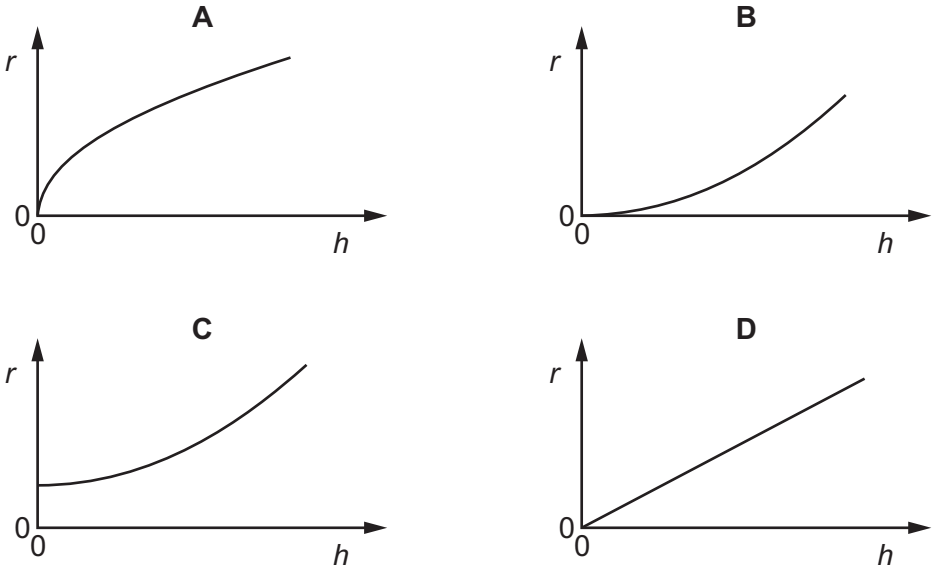

8 Two cars X and Y are positioned as shown at time $t = 0$.

They are travelling in the same direction.

X is 50 m behind Y and has a constant velocity of 30 m s^{-1}. Y has a constant velocity of 20 m s^{-1}.

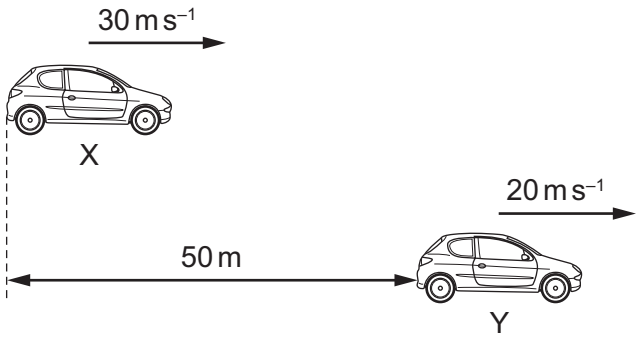

What is the value of t when X is level with Y?

A 1.0 s **B** 1.7 s **C** 2.5 s **D** 5.0 s

9 Which statement about a perfectly elastic collision between two bodies in an isolated system is correct?

A Both total kinetic energy and total momentum are conserved.

B Total kinetic energy is conserved, but total momentum is not conserved.

C Total momentum is conserved, but total kinetic energy is not conserved.

D Neither total kinetic energy nor total momentum is conserved.

10 Two spheres approach each other along the same straight line. Their speeds are u_1 and u_2 before they collide. After the collision, the spheres separate with speeds v_1 and v_2 in the directions shown below.



The collision is perfectly elastic. Which equation must be correct?

A $u_1 - u_2 = v_2 + v_1$

B $u_1 - u_2 = v_2 - v_1$

C $u_1 + u_2 = v_2 + v_1$

D $u_1 + u_2 = v_2 - v_1$

© UCLES 2016

11 The diagram shows a man standing on a platform that is attached to a flexible pipe. Water is pumped through the pipe so that the man and platform remain at a constant height.

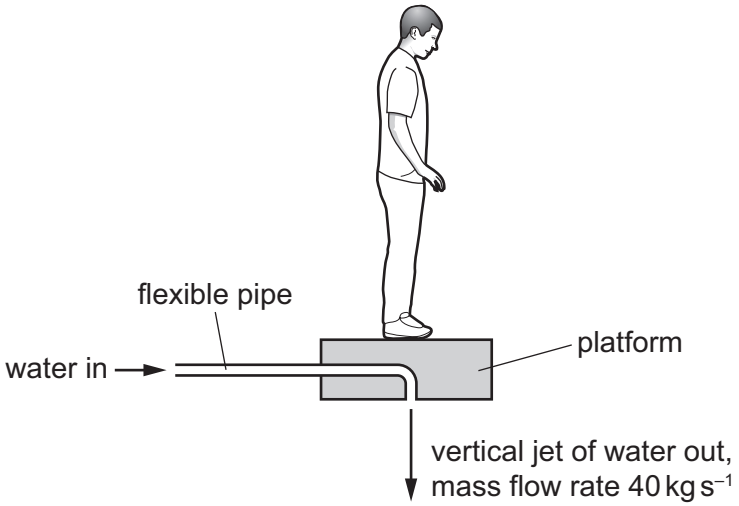

The resultant vertical force on the platform is zero. The combined mass of the man and platform is 96 kg. The mass of water that is discharged vertically downwards from the platform each second is 40 kg.

What is the speed of the water leaving the platform?

A 2.4 m s^{-1} **B** 6.9 m s^{-1} **C** 24 m s^{-1} **D** 47 m s^{-1}

12 Forces are applied to a rigid body. The forces all act in the same plane.

In which diagram is the body in equilibrium?

A

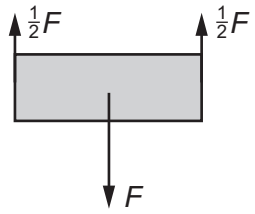

B

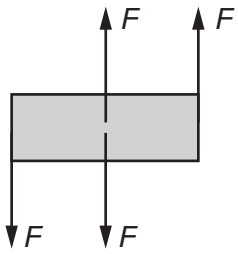

C

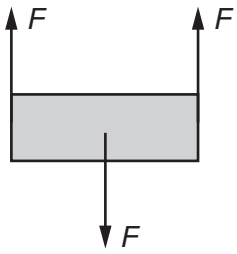

D

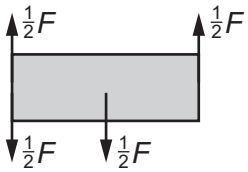

13 A solid metal cylinder stands on a horizontal surface, as shown.

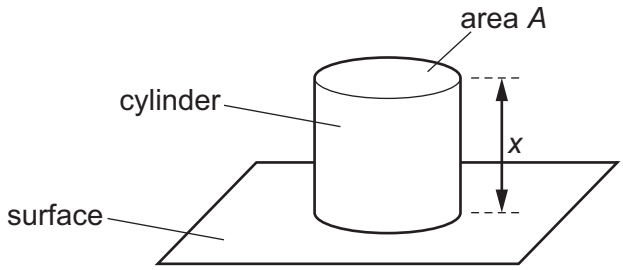

The cylinder has length x and cross-sectional area A. The cylinder exerts a pressure p on the surface. The acceleration of free fall is g.

Which expression gives the density of the metal of the cylinder?

A $\frac{gx}{p}$ **B** $\frac{p}{gx}$ **C** $\frac{gx}{pA}$ **D** $\frac{pA}{gx}$

14 A trailer of weight 30 kN is attached to a cab at X, as shown in the diagram.

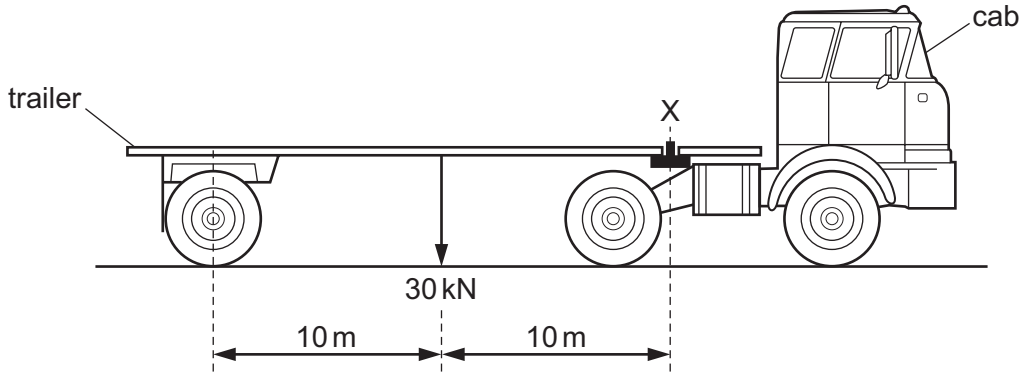

What is the upward force exerted at X by the cab on the trailer?

A 3 kN **B** 15 kN **C** 30 kN **D** 60 kN

15 The diameter of a solid metal sphere is measured using a micrometer screw gauge. The diagram shows an enlargement of the shaft of the micrometer screw gauge when taking the measurement.

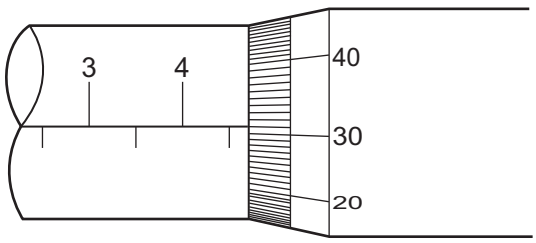

The mass of the sphere is 0.450 g.

What is the density of the metal used to make the sphere?

A 965 kg m^{-3} **B** 1340 kg m^{-3} **C** 7720 kg m^{-3} **D** 10 700 kg m^{-3}

© UCLES 2016

16 Some gas in a cylinder is supplied with thermal energy q.

The gas does useful work in expanding at constant pressure p from volume V_0 to volume V_F, as shown.

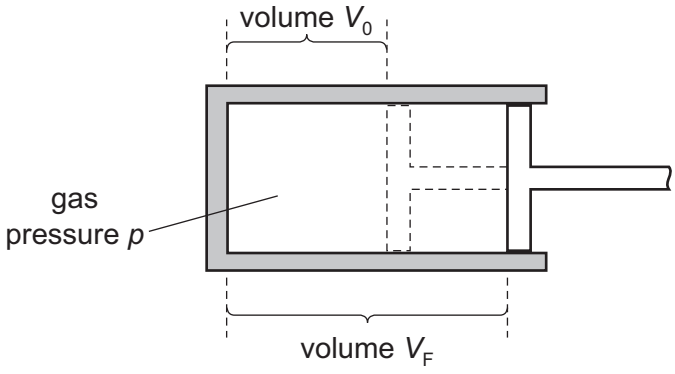

Which expression gives the efficiency of this change?

A $\frac{pV_0}{q}$ **B** $\frac{V_F}{V_0 q}$ **C** $\frac{p(V_F - V_0)}{q}$ **D** $\frac{(V_F - V_0)}{V_0 q}$

17 The power P required to move an object through a medium at constant speed depends on the speed v and the resistive force F acting on the object.

The resistive force F also depends on the speed v.

Which row shows a possible relationship between speed v, resistive force F and power P?

	resistive force F	power P
A	proportional to v	constant
B	proportional to v	proportional to v
C	proportional to v^2	proportional to v^2
D	proportional to v^2	proportional to v^3

18 Which amount of energy is **not** 2400 J?

A the decrease in gravitational potential energy of a body of mass 60 kg when it moves vertically downwards through 40 m near the Earth's surface

B the energy transferred in 15 s by a machine of power 160 W

C the kinetic energy of a body of mass 12 kg moving at a speed of 20 m s^{-1}

D the work done by a gas expanding against a constant external pressure of 120 kPa when its volume increases by 0.020 m^3

© UCLES 2016

19 A hammer with 10 J of kinetic energy hits a nail and pushes it 5.0 mm into a plank.

Both the hammer and nail come to rest after the collision.

What is the approximate average force that acts on the nail while it moves through 5.0 mm?

A 0.050 N **B** 2.0 N **C** 50 N **D** 2000 N

20 A number of identical springs are joined in four arrangements.

Which arrangement has the same spring constant as a single spring?

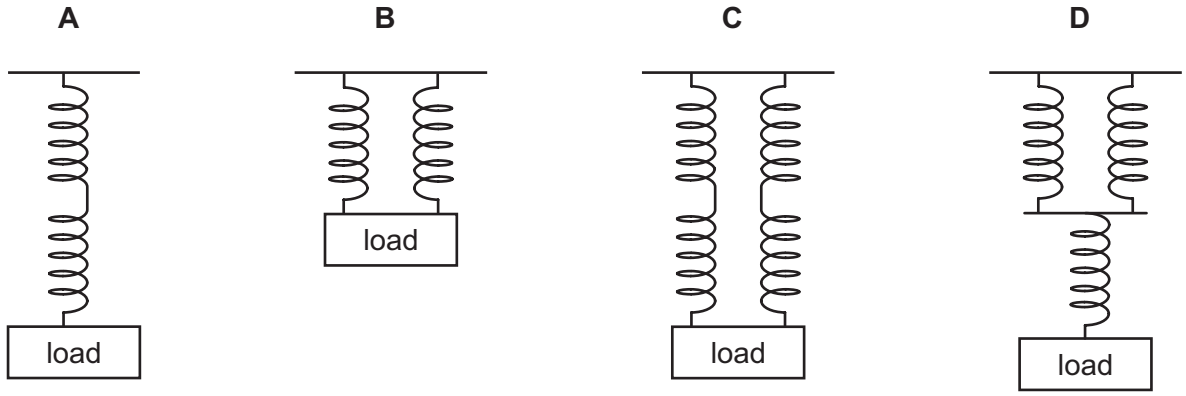

21 A sample of material is stretched by a tensile force to a point beyond its elastic limit. The tensile force is then reduced to zero. The graph of force against extension is shown below.

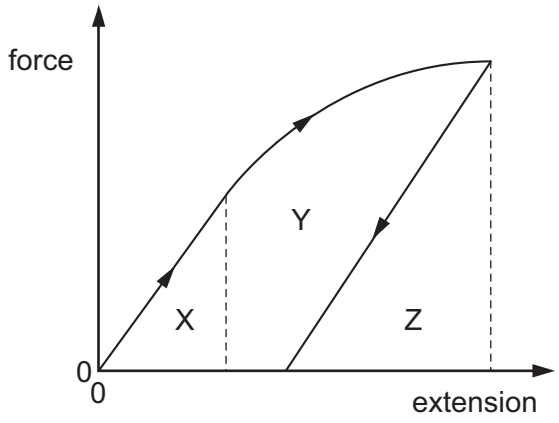

Which area represents the net work done on the sample?

A X **B** X + Y **C** Y + Z **D** Z

22 Two sound waves have frequencies of 250 Hz and 300 Hz. The speed of sound is 340 m s^{-1}.

What is the difference between the wavelengths of the two waves?

A 0.23 m **B** 1.1 m **C** 1.4 m **D** 6.8 m

© UCLES 2016

23 Which electromagnetic waves have the wavelengths of 10^{-2} m, 10^{-5} m, 10^{-10} m and 10^{-13} m?

	10^{-2} m	10^{-5} m	10^{-10} m	10^{-13} m
A	infra-red	microwaves	visible light	X-rays
B	microwaves	infra-red	X-rays	gamma rays
C	microwaves	visible light	ultraviolet	gamma rays
D	radio waves	microwaves	ultraviolet	X-rays

24 Which statement concerning a stationary wave is correct?

A All the particles between two successive nodes oscillate in phase.

B The amplitude of the stationary wave is equal to the amplitude of one of the waves creating it.

C The wavelength of the stationary wave is equal to the separation of two adjacent nodes.

D There is no displacement of a particle at an antinode at any time.

25 Continuous water waves are diffracted through a gap in a barrier in a ripple tank.

Which change will cause the diffraction of the waves to increase?

A increasing the frequency of the waves

B increasing the width of the gap

C reducing the wavelength of the waves

D reducing the width of the gap

26 A parallel beam of light of wavelength 450 nm is incident normally on a diffraction grating which has 300 lines / mm.

What is the total number of intensity maxima observed?

A 7 **B** 8 **C** 14 **D** 15

27 Fringes of separation x are observed on a screen 1.00 m from a double slit that is illuminated by yellow light of wavelength 600 nm.

At which distance from the slits would fringes of the same separation x be observed when using blue light of wavelength 400 nm?

A 0.33 m **B** 0.67 m **C** 0.75 m **D** 1.50 m

© UCLES 2016

28 A charged particle is moving in a uniform electric field.

For the motion of the particle due to the field, which quantity has a constant non-zero value?

A acceleration

B displacement

C rate of change of acceleration

D velocity

29 Which diagram could represent the electric field lines between two oppositely charged conducting surfaces?

A

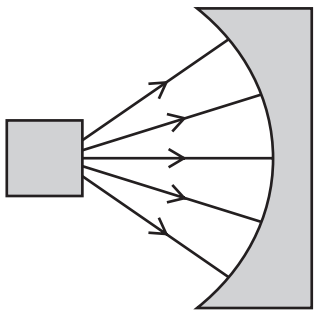

B

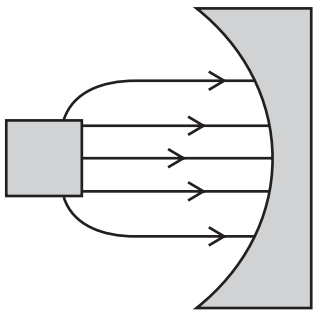

C

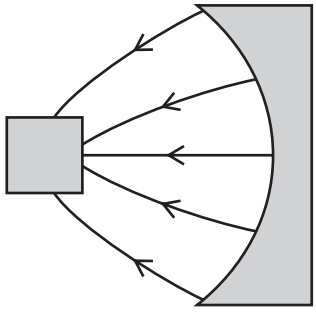

D

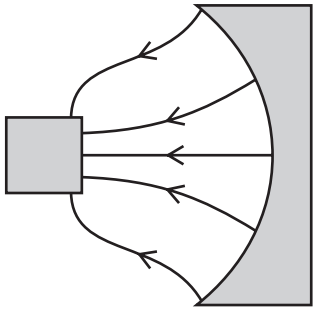

30 There is a current in a resistor for an unknown time.

Which two quantities can be used to calculate the energy dissipated by the resistor?

A the current in the resistor and the potential difference across the resistor

B the resistance of the resistor and the current in the resistor

C the total charge passing through the resistor and the potential difference across the resistor

D the total charge passing through the resistor and the resistance of the resistor

© UCLES 2016

31 Two copper wires of equal length are connected in parallel. A potential difference is applied across the ends of this parallel arrangement. Wire S has a diameter of 3.0 mm. Wire T has a diameter of 1.5 mm.

What is the value of the ratio $\frac{\text{current in S}}{\text{current in T}}$?

A $\frac{1}{4}$ **B** $\frac{1}{2}$ **C** 2 **D** 4

32 A 100 Ω resistor conducts a current with changing direction and magnitude, as shown.

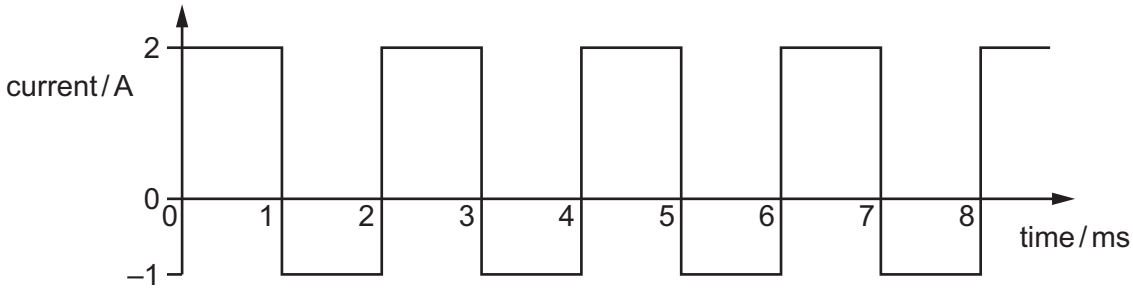

What is the mean power dissipated in the resistor?

A 100 W **B** 150 W **C** 250 W **D** 400 W

33 Which graph shows the I–V characteristic of a filament lamp?

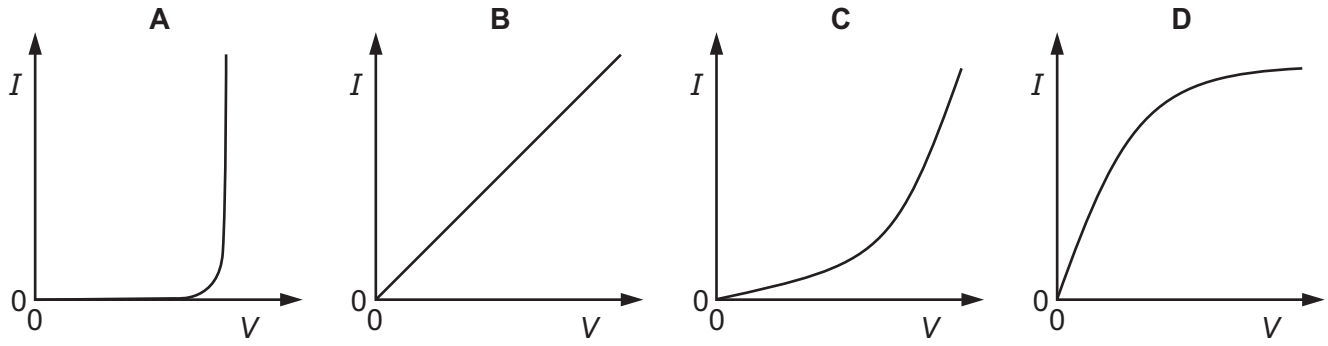

34 In the circuit shown, X is a variable resistor whose resistance can be changed from 5.0 Ω to 500 Ω. The e.m.f. of the battery is 12.0 V. It has negligible internal resistance.

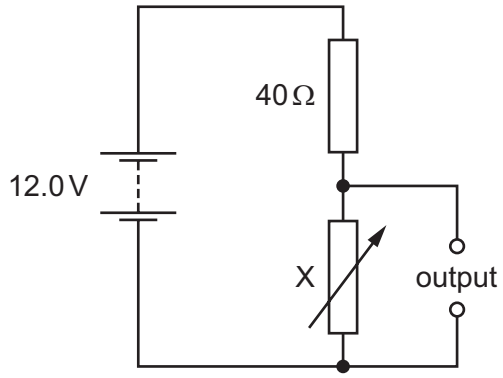

What is the maximum range of values of potential difference across the output?

A 1.3 V to 11.1 V

B 1.3 V to 12.0 V

C 1.5 V to 11.1 V

D 1.5 V to 12.0 V

35 There is a current from P to R in the resistor network shown.

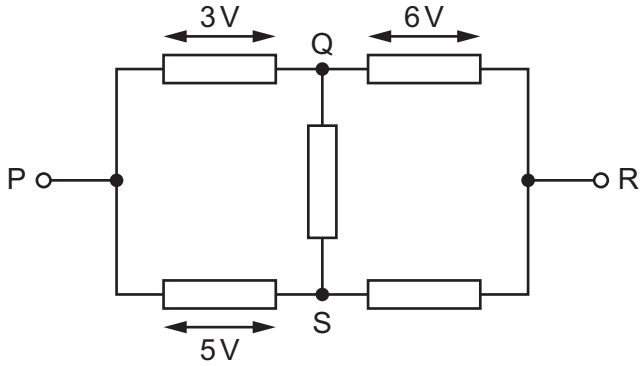

The potential difference (p.d.) between P and Q is 3 V.

The p.d. between Q and R is 6 V.

The p.d. between P and S is 5 V.

Which row in the table is correct?

	p.d. between Q and S	p.d. between S and R
A	2 V	4 V
B	2 V	10 V
C	3 V	4 V
D	3 V	10 V

© UCLES 2016

36 Two resistors of resistances R_1 and R_2 are connected in parallel.

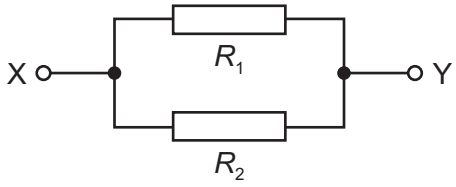

What is the combined resistance between X and Y?

A $R_1 + R_2$ **B** $\frac{R_1 R_2}{R_1 + R_2}$ **C** $\frac{R_1 + R_2}{R_1 R_2}$ **D** $\frac{R_1}{R_2}$

37 A voltmeter is used to monitor the operation of an electric motor. The motor speed is controlled by a variable resistor. A fixed resistor is used to limit the speed.

The current in the motor is gradually changed.

In which circuit is the voltmeter reading proportional to the current in the motor?

A

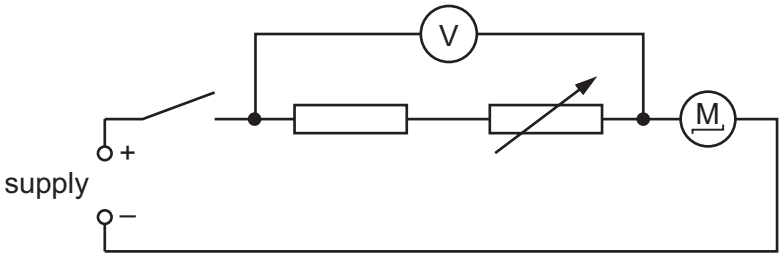

B

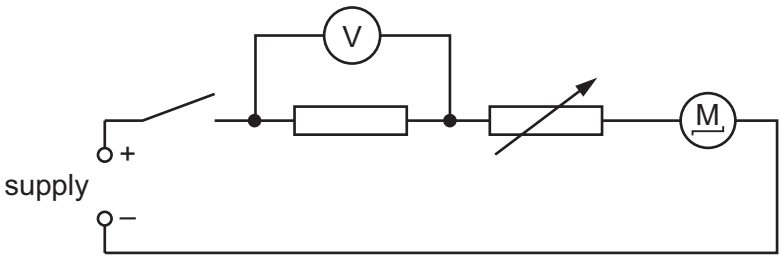

C

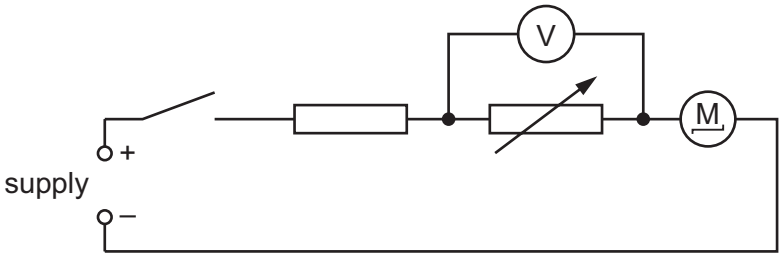

D

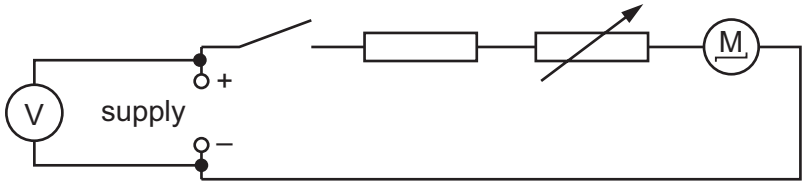

38 Which statement describes β^- decay in terms of a simple quark model?

A A down quark changes to an up quark and emits an electron and an electron antineutrino.

B A down quark changes to an up quark and emits a positron and an electron neutrino.

C An up quark changes to a down quark and emits an electron and an electron antineutrino.

D An up quark changes to a down quark and emits a positron and an electron neutrino.

39 Which word equation represents β^+ decay?

A proton $\rightarrow$ neutron + electron + electron antineutrino

B proton $\rightarrow$ neutron + electron + electron neutrino

C proton $\rightarrow$ neutron + positron + electron antineutrino

D proton $\rightarrow$ neutron + positron + electron neutrino

40 Which statement about the alpha-particle scattering experiment provides evidence for the existence of the nucleus?

A A tiny proportion of the alpha-particles are deflected through large angles.

B Slower alpha-particles are deflected through larger angles.

C The kinetic energies of the deflected alpha-particles are unchanged.

D The number of alpha-particles deflected depends on the thickness of the foil.

© UCLES 2016

BLANK PAGE

BLANK PAGE

Permission to reproduce items where third-party owned material protected by copyright is included has been sought and cleared where possible. Every reasonable effort has been made by the publisher (UCLES) to trace copyright holders, but if any items requiring clearance have unwittingly been included, the publisher will be pleased to make amends at the earliest possible opportunity.

To avoid the issue of disclosure of answer-related information to candidates, all copyright acknowledgements are reproduced online in the Cambridge International Examinations Copyright Acknowledgements Booklet. This is produced for each series of examinations and is freely available to download at www.cie.org.uk after the live examination series.

Cambridge International Examinations is part of the Cambridge Assessment Group. Cambridge Assessment is the brand name of University of Cambridge Local Examinations Syndicate (UCLES), which is itself a department of the University of Cambridge.